P-250*i*B

Max. load capacity at wrist: 15 kg

Max. reach: 2800 mm

FANUC

Robot			Max.load capacity at wrist (kg)	Reach (mm)	Controlled axes	Repeatability (mm)	Mechanical weight (kg)	Motion range (°)						Maximum speed (°/s)						Allowable load moment at wrist (Nm) Allowable load inertia at wrist (kg m²)			Input power source (VAC) (50-60 HZ)
Series	Version	Type						J1	J2	J3	J4	J5	J6	J1	J2	J3	J4	J5	J6	J4	J5	J6	
P-250	*i*B	-	15	2800	6	± 0.07	530	320	280	330	1080	1080	1080	160	160	160	375	430	545	65 3	55 2.1	11.5 .35	380-575 +10/-15%
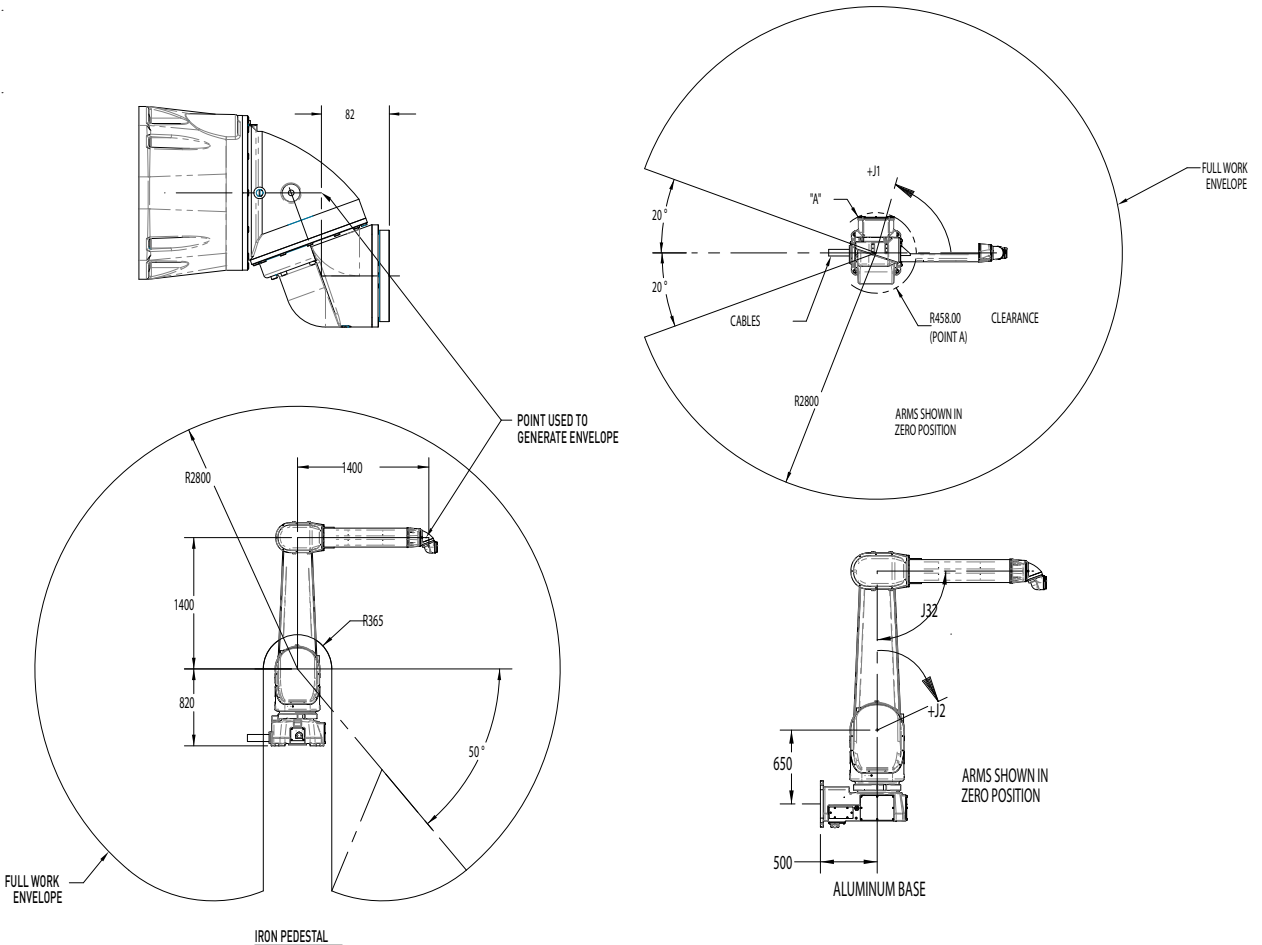
P-250*i*B Paint robot