FANUC

Considering Automating with Collaborative Robots?

THINK CRX



Why settle for less when you can get **MORE?**



FANUC's series of collaborative robots, also known as cobots, offer **more** choices, payloads, reach and speeds than any other cobots on the market. Safety-certified, FANUC cobots will add value to your process by working hand-in-hand with your team, whether they are experienced or first-time automation users.

More choices for more businesses

Do you run a small- or medium-sized company, and this is the first time you've thought about adding automation? If so, consider a FANUC cobot. Quick to install, easy to use and offering unrivalled reliability, they represent a lasting solution that will boost your productivity and provide new growth opportunities. They also offer a quick return on investment. Let FANUC help you find the right cobot solution to meet your needs!



Easy and Intuitive

Our interactive programming gives you the freedom to teach points using built-in hand guidance function or a tablet interface with drag and drop icons.

The *i*HMI editor provides step-by-step guides to set up your cobot, create programs and has tutorials for new users. In addition, all of our cobots are sensitive enough to stop at a touch and restart at the push of a button.

MORE versatility and **MORE** precision

Key Features

INTEGRATION
Integration has never been easier thanks to our cobots' lightweight, slim, and compact design

USABILITY
Ready for business in no time: the FANUC CRX series is quick to set up and exceedingly easy to program

SERVICE
Enjoy 8 years of maintenance-free operations

8 YEARS ZERO MAINTENANCE

100% PROVEN INDUSTRIAL RELIABILITY



CRX-3*i*A
Payload: 3 kg
Reach: 692 mm

CRX-5*i*A
Payload: 5 kg
Reach: 994 mm

CRX-10*i*A
Payload: 10 kg
Reach: 1,249 mm

CRX-10*i*A/L
Payload: 10 kg
Reach: 1,418 mm

CRX-20*i*A/L
Payload: 20 kg
Reach: 1,418 mm

CRX-30*i*A
Payload: 30/25/40*1) kg
Reach: 1,756/1,889*2)/1,700*3) mm

CRX-10*i*A/L Paint
Payload: 10 kg
Reach: 1,418 mm

*1) Max. load capacity when 40kg payload mode is selected. The wrist flange orientation is limited to downward-facing.
40kg payload mode is available only when the controller is operated with a 200-240 VAC power supply.
*2) Operating space is expanded when 25kg payload mode is selected
*3) Operating space is limited when 40kg payload mode is selected

MORE freedom and flexibility

The FANUC CRX series can work side by side with people or collaborate with them without the need for external safety devices (in accordance with risk assessment). As a result, you enjoy better versatility and work ergonomics, benefit from flexible mounting options and save valuable production space.

ISO-certified safe to work with people

These collaborative robots are ISO 10218-1 and ISO 13849-1 certified and equipped with ultra-safe FANUC contact stop detection based on proven sensor technology. Highly sensitive contact stop function stop the robot smoothly even with light contact of people and all robots restart easily and quickly after a contact stop. In addition to contact stop, the CRX series robots come with push to escape functions to be able to push the robot out of the way manually for additional safety. In addition, the robot will retract immediately when it contacts hard objects to minimize a pinching force. Speed and safety settings can be customized to help you adapt each collaborative robot to meet your exact specifications.

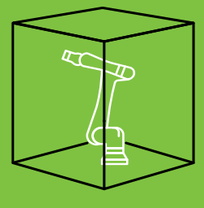

Dual Check Safety (DCS)

DCS is a safety system that monitors position and speed. It is a proven technology used on many standard FANUC robots.

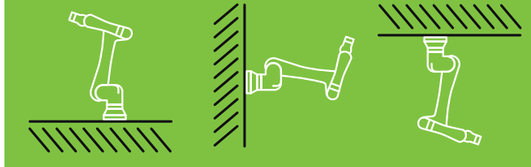

Flexible mounting options

For more flexible layouts, all models can be mounted upside-down, on a wall, or fixed to a mobile platform or rail.

Drag & Drop Programming

Whether you are a seasoned programmer or a first-time operator – FANUC cobots provide you with user-friendly and intuitive programming. Furthermore, you can also select:

Easy programming with Tablet Teach Pendant

- FANUC's Tablet Teach Pendant is designed for intuitive programming, thanks to a large touch screen
- Additional drag & drop functionality lets you easily program an application within minutes
- Two interfaces are available:
  - New User Interface for beginners
  - iPendant User Interface for experienced operators

Easy programming with *i*HMI on iPendant Touch

- FANUC's ***i***HMI user interface offers ample processing power and clear high-resolution screen displays
- Display setup, programming guides and tutorials are all readily accessible from the main home screen
- 30 minutes – that's all it takes to create a program for simple handling tasks, thanks to FANUC's programming guide



New user interface

EASY teaching without programming



By leading it through paths and points, you can now easily teach your FANUC collaborative robot. Additionally, hand guidance is comfortable and intuitive, thereby eliminating the need for a pendant to teach the device positions.

This will not only save you valuable time, but also money – as training costs can therefore be kept to a minimum.

MORE reliability

All of FANUC's CRX series robots use proven FANUC technology and a familiar interface. As a result, the collaborative robots operate like any other FANUC robot with exactly the same high degree of reliability, uptime, dexterity and world class +/- 0.01-0.05 mm repeatability.



More features

With more than 250 software features, FANUC's R-30*i*B Plus controller guarantees the best processing speed and robot performance for every FANUC cobot. Designed for increased user-friendliness and minimal energy consumption, the R-30*i*B Plus comes in five different cabinets to help you make the most of your floor space and production cell layouts. With the addition of the CRX line, the R-30*i*B family expanded to include the R-30*i*B Mini Plus Controller for even more space savings.

Proven technology

For more reliability, all FANUC cobots are based on proven FANUC technology. They offer exceptional repeatability and come with the standard FANUC interface for easy learning, programming and setup. As a result, no extensive retraining is necessary. Application scenarios can be easily modeled using ROBOGUIDE simulation software. FANUC cobots are customizable and include a large number of options. They are also backed by full spare parts availability, global service and 24/7 support.

Service First

MORE possibilities

As with all FANUC robots, FANUC's collaborative robot series can be equipped with any of FANUC's intelligence functions - made by FANUC, developed specifically for FANUC robots, to give you more possibility for automating with cobots. Intelligence-ready functions include FANUC 2D and 3D vision sensors using *i*RVision and much more.



Collaborative arc welding

FANUC's collaborative arc welding robots offer the same high level of performance that FANUC ARC Mate robots are known for including world-renowned technology and proven reliability. FANUC's arc welding cobots are equipped with FANUC ArcTool application software, an easy programming interface that supports both simple and complex applications.



Palletizing for boosting productivity and worker safety

FANUC's CRX-30*i*A cobot has an enhanced 30kg payload capacity and long 1,756 mm reach, making it perfect for palletizing applications. It can also be equipped with 3DV *i*RVision, which enables the cobot to locate and pick products on a pallet and place them onto another pallet or a platform part of an Automated Storage & Retrieval System (ASRS).

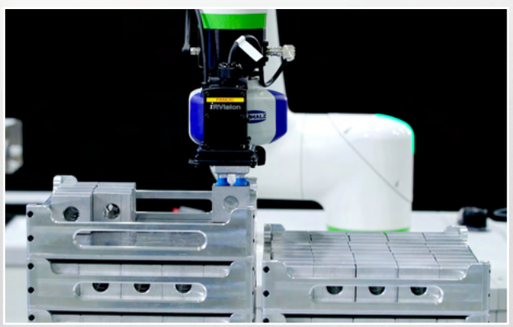

Recognition, reading and sorting

For the CRX series, new vision features include simple vision setup for beginners using the Tablet TP and drag & drop icons.

Vision features such as 1-marker and 3-marker offset for locating equipment are available when the robot is on a mobile hand-cart or AGV or AMR.

MORE collaborative opportunities with FANUC cobots

Key Industries

- AEROSPACE
- AGRICULTURE
- AUTOMOTIVE
- CONSUMER GOODS
- DIE CAST, FOUNDRY & MOLD
- ELECTRONICS
- FABRICATED METALS
- FOOD & BEVERAGE
- JOB SHOPS
- LIFE SCIENCES
- LOGISTICS
- PLASTICS
- WAREHOUSING
- WOODWORKING





ASSEMBLING
Cobots are ideally suited to take over repetitive or complex assembly tasks while delivering a precise and consistent output.



GRINDING AND DEBURRING
Tasks which involve removing material can easily be carried out by cobots, adding flexibility, efficiency, and quality to the process.



HANDLING
FANUC Vision and Force accessories can quickly be connected to cobots so as to cover a variety of different handling operations.



MACHINE TENDING
When it comes to repetitive operations such as machine tending, cobots help improve your process speed and quality while at the same time keeping operators safe.



PARTS INSPECTION AND TESTING
Easy to program, FANUC cobots can carry out inspecting operations while assuring accurate production batches and product quality.



PICKING, PACKING, PALLETIZING
The payloads and reaches of FANUC cobots make them suitable to a wide range of handling tasks, relieving operators from heavy lifting.

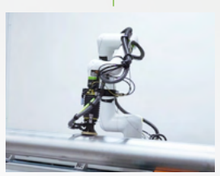

SANDING AND POLISHING
Equipping cobots with FANUC Force Sensor assures the precision and correct force needed for these kinds of operations.



PAINTING
The CRX-10iA/L Paint collaborative robot offers flexible automation to more paint and coating operations, including high-mix, low-volume applications.



SEALING AND DISPENSING
Dispensing tasks like gluing and sealing can be efficiently carried over by cobots.



WELDING
FANUC cobots are capable of offering consistent weld quality, on top of being easy to teach and program.

MORE information

Technical data **CRX** series

Specifications	CRX-3*i*A	CRX-5*i*A	CRX-10*i*A	CRX-10*i*A/L	CRX-20*i*A/L	CRX-30*i*A
Type	3	5	10	10	20	30
Controlled axes	6	6	6	6	6	6
Max. load capacity at wrist [kg]	3	5	10	10	20	30/25/40*6)
Reach [mm]*1)	692	994	1,249	1,418	1,418	1,756/1,889*4)/1,700*5)
Repeatability [mm] *3)	±0.02	±0.03	±0.04	±0.04	±0.04	±0.05
Mass [kg]	11	25	40	40	41	135
Installation: floor | upside down | wall	• | • | •	• | • | •	• | • | •	• | • | •	• | • | •	• | • | •
Motion range						
J1 axis rotation [°]	400	400	380	360	360	360
J2 axis rotation [°]	360	360	360	360	360	360
J3 axis rotation [°]	592	635	570	540	540	540
J4 axis wrist rotation [°]	380	380	380	380	380	380
J5 axis wrist swing [°]	360	360	360	360	360	360
J6 axis wrist rotation [°]	450	450	450	450	450	450
Max. speed: Collaborative mode [mm / s] *2)	1,200	1,000	1,000	1,000	1,000	1,000
Max. speed: High speed mode [mm / s] *2)	2,500	2,000	2,000	2,000	1,000	2,000
Allowable load moment at wrist						
J4 axis [Nm]	8.5	19.0	34.8	34.8	70.0	115.0
J5 axis [Nm]	6.5	15.4	26.0	26.0	64.0	85.0
J6 axis [Nm]	4.0	6.7	11.0	11.0	30.0	32.0
Allowable load inertia at wrist						
J4 axis [kgm^2]	0.32	0.77	1.28	1.28	4.00	4.70
J5 axis [kgm^2]	0.24	0.50	0.90	0.90	4.00	4.00
J6 axis [kgm^2]	0.08	0.10	0.30	0.30	2.00	2.00
Installation environment						
Input power source [VAC]	100-120 200-240	100-120 200-240	100-120 200-240	100-120 200-240	100-120 200-240	100-120 200-240
Ambient operating temperature [°C]	0–45	0–45	0–45	0–45	0–45	0–45
Protection						
Body standard/optional	IP67	IP67	IP67	IP67	IP67	IP67
Wrist & J3 arm standard/optional	IP67	IP67	IP67	IP67	IP67	IP67

• standard
*1) Reach specification from faceplate
*2) It is necessary to set a motion speed according to risk assesment of system.
*3) Compliant with ISO9283.
*4) Operating space is expanded when 25kg payload mode is selected.
*5) Operating space is limited when 40kg payload mode is selected.
*6) Max. load capacity when 40kg payload mode is selected. The wrist flange orientation is limited to downward-facing.
40kg payload mode is available only when the controller is operated with a 200-240 VAC power supply.

Working range CRX-3*i*A

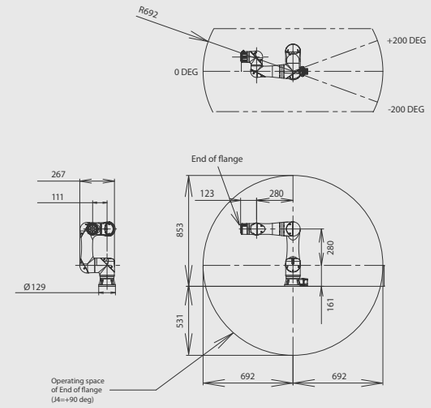

Working range CRX-5*i*A

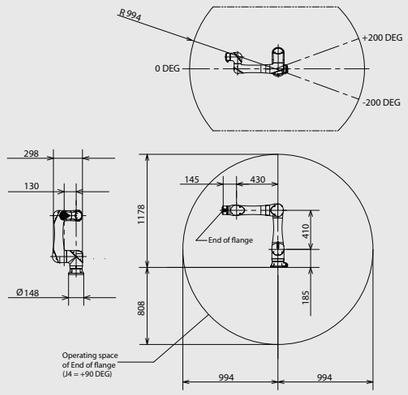

Working range CRX-10*i*A

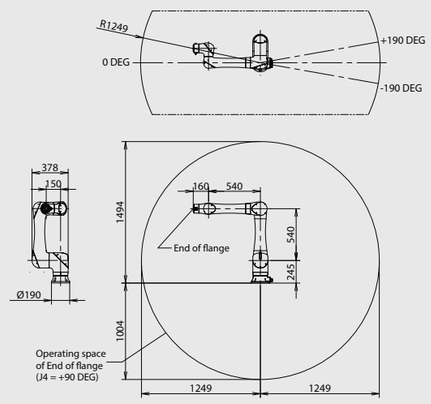

Working range CRX-10*i*A/L

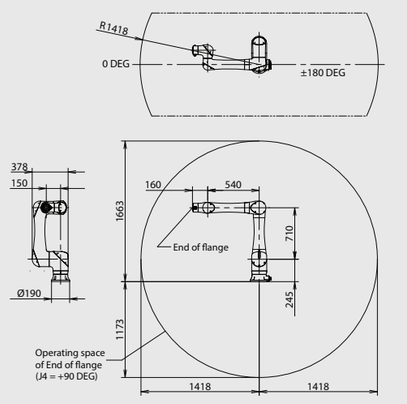

Working range CRX-20*i*A/L

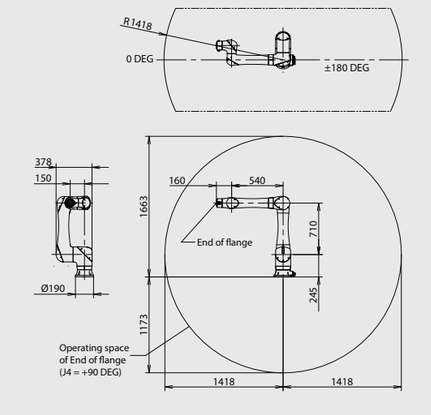

Working range CRX-30*i*A

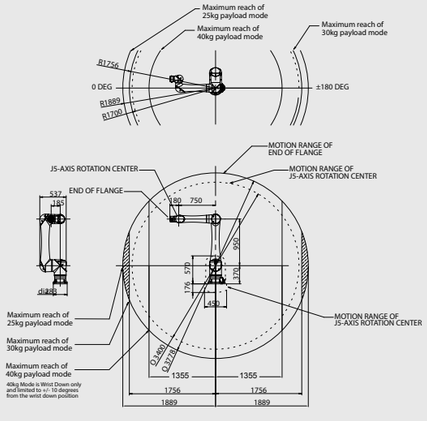

CRX Food Series

FANUC CRX food-grade collaborative robots (cobots) are specifically designed for use in food and beverage manufacturing environments.

Key Features

Rated IP67, FANUC's CRX food-grade cobots are dust-tight and waterproof and can operate in harsh food production environments without compromising performance.

The wrist features a corrosion-resistant finish.

A smooth surface and fully enclosed design with internal cable routing makes it easy to clean.

Epoxy coating is compliant with USDA Incidental Food Contact Requirements.

Uses NSF H1 food-grade grease which is safe for incidental food contact.



Is a FANUC CRX Food-Grade Cobot Right for You?

If your production involves food handling, wet environments, or has rigorous hygiene requirements, a FANUC CRX food-grade cobot is a great choice.

CRX-5*i*A Food Grade
Payload: 5 kg
Reach: 994 mm

CRX-10*i*A Food Grade
Payload: 10 kg
Reach: 1,249 mm

CRX-10*i*A/L Food Grade
Payload: 10 kg
Reach: 1,418 mm

CRX-20*i*A/L Food Grade
Payload: 20 kg
Reach: 1,418 mm

CRX-30*i*A Food Grade
Payload: 30/25/40[*1] kg
Reach: 1,756/1,889[*2]/1,700[*3] mm

*1) Max. load capacity when 40kg payload mode is selected. The wrist flange orientation is limited to downward-facing
40kg payload mode is available only when the controller is operated with a 200-240 VAC power supply.
*2) Operating space is expanded when 25kg payload mode is selected
*3) Operating space is limited when 40kg payload mode is selected

MORE information

Features:

NSF H1 food-grade grease
White USDA compliant epoxy coating

Technical data CRX food series

Specifications	CRX-5*i*A Food Grade	CRX-10*i*A Food Grade	CRX-10*i*A/L Food Grade	CRX-20*i*A/L Food Grade	CRX-30*i*A Food Grade
Type	5	10	10	20	30
Controlled axes	6	6	6	6	6
Max. load capacity at wrist [kg]	5	10	10	20	30/25/40*6)
Reach [mm]*1)	994	1,249	1,418	1,418	1,756/1,889*4)/1,700*5)
Repeatability [mm] *3)	±0.03	±0.04	±0.04	±0.04	±0.05
Mass [kg]	25	40	40	41	135
Installation: floor | upside down | wall	• | • | •	• | • | •	• | • | •	• | • | •	• | • | •
Motion range					
J1 axis rotation [°]	400	380	360	360	360
J2 axis rotation [°]	360	360	360	360	360
J3 axis rotation [°]	635	570	540	540	540
J4 axis wrist rotation [°]	380	380	380	380	380
J5 axis wrist swing [°]	360	360	360	360	360
J6 axis wrist rotation [°]	450	450	450	450	450
Max. speed: Collaborative mode [mm / s] *2)	1,000	1,000	1,000	1,000	1,000
Max. speed: High speed mode [mm / s] *2)	2,000	2,000	2,000	1,000	2,000
Allowable load moment at wrist					
J4 axis [Nm]	19.0	34.8	34.8	70.0	115.0
J5 axis [Nm]	15.4	26.0	26.0	64.0	85.0
J6 axis [Nm]	6.7	11.0	11.0	30.0	32.0
Allowable load inertia at wrist					
J4 axis [kgm²]	0.77	1.28	1.28	4.00	4.70
J5 axis [kgm²]	0.50	0.90	0.90	4.00	4.00
J6 axis [kgm²]	0.10	0.30	0.30	2.00	2.00
Installation environment					
Input power source [VAC]	100-120 200-240	100-120 200-240	100-120 200-240	100-120 200-240	100-120 200-240
Ambient operating temperature [°C]	0–45	0–45	0–45	0–45	0–45
Protection					
Body standard/optional	IP67	IP67	IP67	IP67	IP67
Wrist & J3 arm standard/optional	IP67	IP67	IP67	IP67	IP67

• standard
*1) Reach specification from faceplate
*2) It is necessary to set a motion speed according to risk assesment of system.
*3) Compliant with ISO9283.
*4) Operating space is expanded when 25kg payload mode is selected.
*5) Operating space is limited when 40kg payload mode is selected.
*6) Max. load capacity when 40kg payload mode is selected. The wrist flange orientation is limited to downward-facing. 40kg payload mode is available only when the controller is operated with a 200-240 VAC power supply.

Working range CRX-5*i*A Food Grade

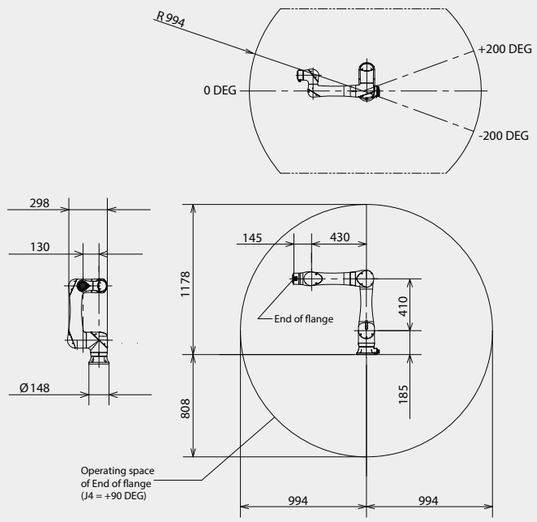

Working range CRX-10*i*A Food Grade

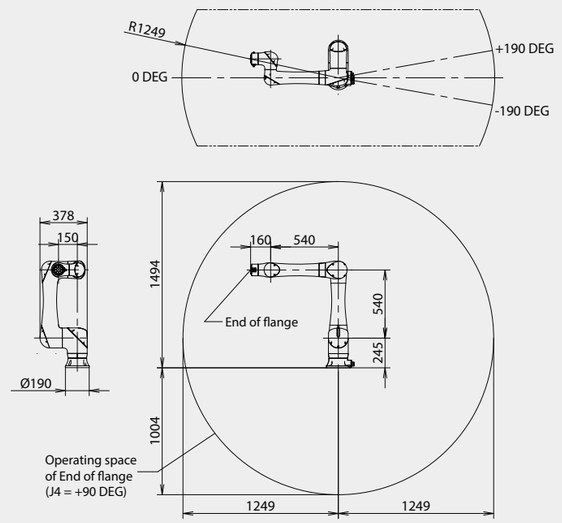

Working range CRX-10*i*A/L and CRX-20*i*A/L Food Grade

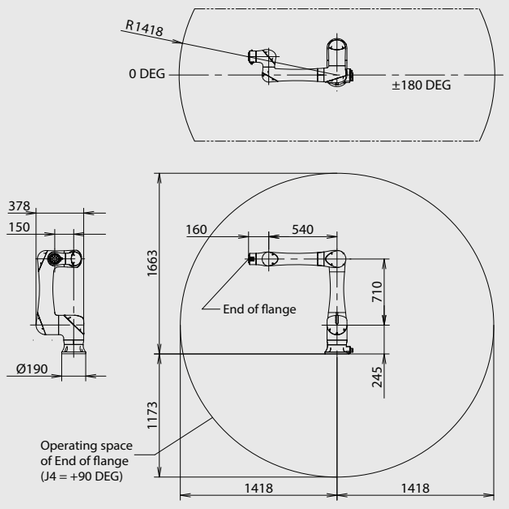

Working range CRX-30*i*A Food Grade

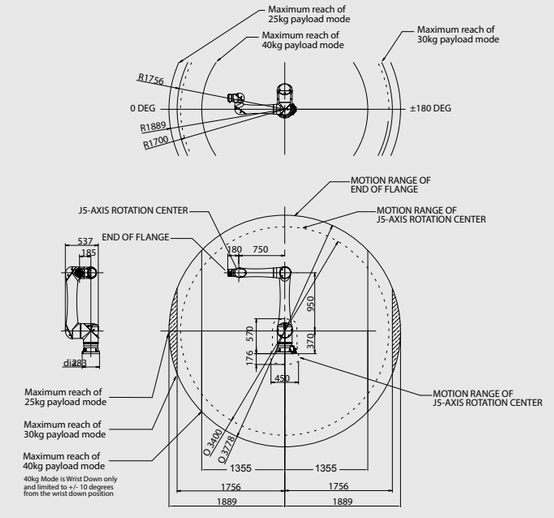

CRX Paint Cobot

The FANUC CRX-10*i*A/L Paint collaborative robot is specifically designed for use in the painting, powder and/or liquid coating and fiberglass industries.

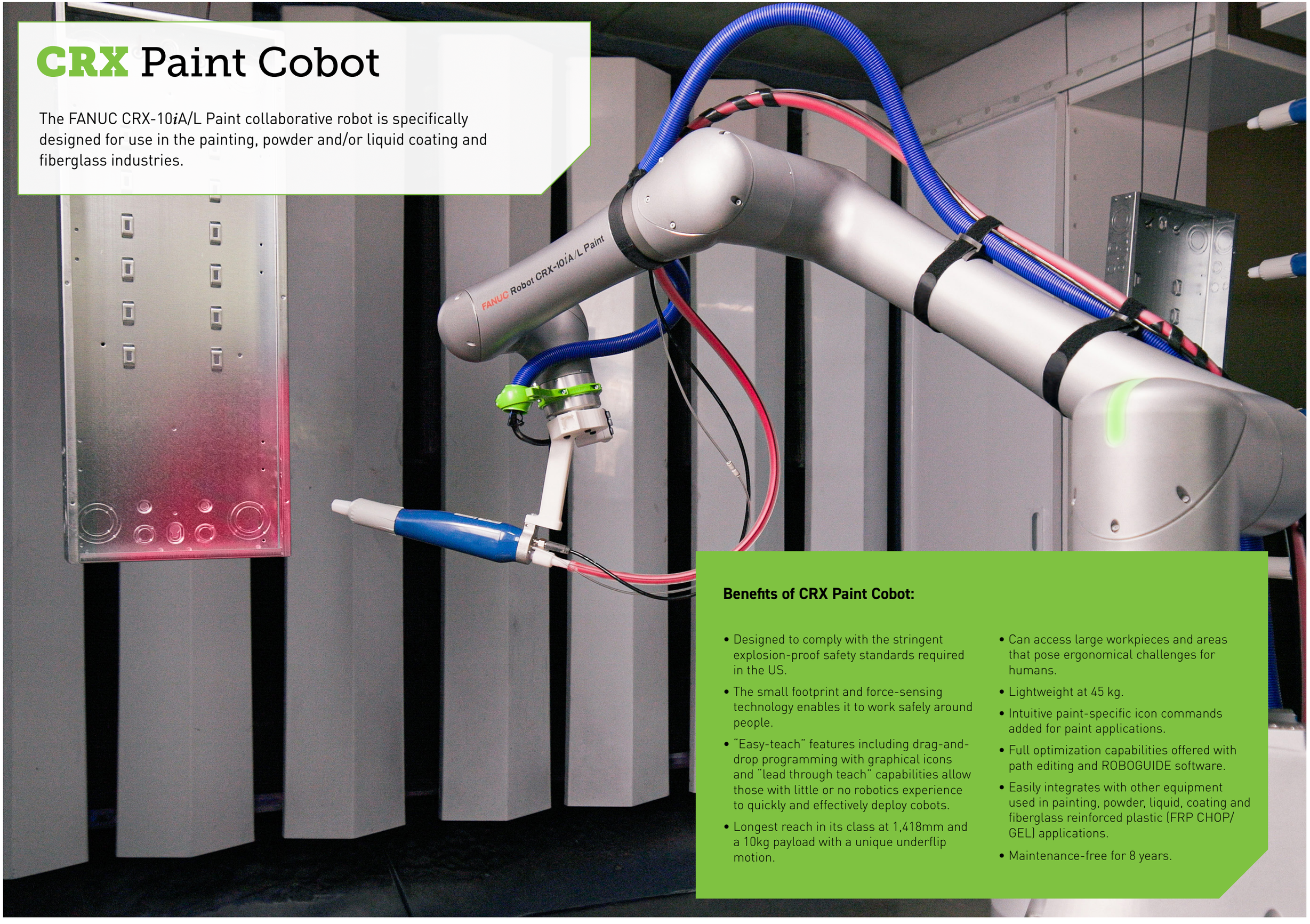

Benefits of CRX Paint Cobot:

- Designed to comply with the stringent explosion-proof safety standards required in the US.
- The small footprint and force-sensing technology enables it to work safely around people.
- "Easy-teach" features including drag-and-drop programming with graphical icons and "lead through teach" capabilities allow those with little or no robotics experience to quickly and effectively deploy cobots.
- Longest reach in its class at 1,418mm and a 10kg payload with a unique underflip motion.
- Can access large workpieces and areas that pose ergonomical challenges for humans.
- Lightweight at 45 kg.
- Intuitive paint-specific icon commands added for paint applications.
- Full optimization capabilities offered with path editing and ROBOGUIDE software.
- Easily integrates with other equipment used in painting, powder, liquid, coating and fiberglass reinforced plastic (FRP CHOP/GEL) applications.
- Maintenance-free for 8 years.

MORE information

Technical data **CRX** paint cobot

Specifications	CRX-10*i*A/L Paint
Type	10
Controlled axes	6
Max. load capacity at wrist [kg]	10
Reach [mm]*1)	1,418
Repeatability [mm] *3)	±0.04
Mass [kg]	47
Installation: floor | upside down | wall	• | • | •
Motion range	
J1 axis rotation [°]	360
J2 axis rotation [°]	360
J3 axis rotation [°]	540
J4 axis wrist rotation [°]	380
J5 axis wrist swing [°]	360
J6 axis wrist rotation [°]	450
Max. speed: Collaborative mode [mm / s] *2)	1,000
Max. speed: High speed mode [mm / s] *2)	2,000
Allowable load moment at wrist	
J4 axis [Nm]	34.8
J5 axis [Nm]	26.0
J6 axis [Nm]	11.0
Allowable load inertia at wrist	
J4 axis [kgm²]	1.28
J5 axis [kgm²]	0.90
J6 axis [kgm²]	0.30
Installation environment	
Input power source [VAC]	100-120 200-240
Ambient operating temperature [°C]	0–45
Protection	
Body standard/optional	IP67
Wrist & J3 arm standard/optional	IP67

• standard
*1) Reach specification from faceplate
*2) It is necessary to set a motion speed according to risk assesment of system.
*3) Compliant with ISO9283.



Working range CRX-10*i*A/L Paint

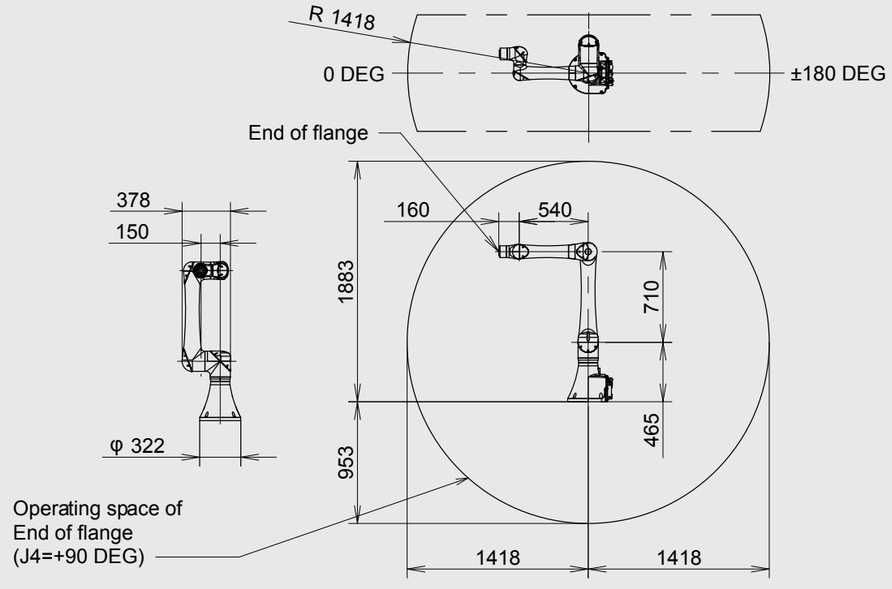

MORE enhancements

FANUC's CRX collaborative robots are now powered by the next-generation R-50*i*A controller, providing enhanced performance, streamlined integration, and industry-leading reliability.

Key Features

EXPANDED CRX LINEUP
Available models include CRX/3-7A, CRX/5-10A, CRX/10-12A, CRX/10-14A, CRX/20-14A, and CRX/30-18A

SIMPLIFIED INSTALLATION & MAINTENANCE
Detachable robot cables at the J1 base allow for easier installation, serviceability, and system integration.

1.5m cable is standard between robot and controller, except for the CRX/30-18A, which has a 4m cable.

ENHANCED USER EXPERIENCE
Integrated wrist-mounted control buttons come standard on every model, enabling intuitive robot guidance and operation.

Thru-arm air is standard on all models, not including CRX/3-7A and CRX/5-10A.

SIMPLIFIED CONNECTIVITY
ESx Ethernet port replaces the CAM connection on all R-50*i*A CRX models, except for CRX/3-7A.



Standard controller: R-50*i*A Mate

Compact, stackable controller delivering reliable performance and easy integration for small to mid-size robot applications.

Rated supply voltage: 200 - 240 VAC



MORE information

Technical data CRX R-50*i*A line

Specifications	CRX/3-7A	CRX/5-10A	CRX/10-12A	CRX/10-14A	CRX/20-14A	CRX/30-18A
Type	3	5	10	10	20	30
Controlled axes	6	6	6	6	6	6
Max. load capacity at wrist [kg]	3	5	10	10	20	30/25
Reach [mm]*1)	692	994	1,249	1,418	1,418	1,756/1,889*4)
Repeatability [mm] *3)	±0.02	±0.03	±0.04	±0.04	±0.04	±0.05
Mass [kg]	11	25	40	40	41	135
Installation: floor | upside down | wall	• | • | •	• | • | •	• | • | •	• | • | •	• | • | •	• | • | •
Motion range						
J1 axis rotation [°]	400	400	380	360	360	360
J2 axis rotation [°]	360	360	360	360	360	360
J3 axis rotation [°]	592	635	570	540	540	540
J4 axis wrist rotation [°]	380	380	380	380	380	380
J5 axis wrist swing [°]	360	360	360	360	360	360
J6 axis wrist rotation [°]	450	450	450	450	450	450
Max. speed: Collaborative mode [mm / s] *2)	1,200	1,000	1,000	1,000	1,000	1,000
Max. speed: High speed mode [mm / s] *2)	2,500	2,000	2,000	2,000	1,000	2,000
Allowable load moment at wrist						
J4 axis [Nm]	8.5	19.0	34.8	34.8	70.0	115.0
J5 axis [Nm]	6.5	15.4	26.0	26.0	64.0	85.0
J6 axis [Nm]	4.0	6.7	11.0	11.0	30.0	32.0
Allowable load inertia at wrist						
J4 axis [kgm^2]	0.32	0.77	1.28	1.28	4.00	4.70
J5 axis [kgm^2]	0.24	0.50	0.90	0.90	4.00	4.00
J6 axis [kgm^2]	0.08	0.10	0.30	0.30	2.00	2.00
Installation environment						
Input power source [VAC]	200-240	200-240	200-240	200-240	200-240	200-240
Ambient operating temperature [°C]	0–45	0–45	0–45	0–45	0–45	0–45
Protection						
Body standard/optional	IP67	IP67	IP67	IP67	IP67	IP67
Wrist & J3 arm standard/optional	IP67	IP67	IP67	IP67	IP67	IP67

• standard
*1) Reach specification from faceplate
*2) It is necessary to set a motion speed according to risk assesment of system.
*3) Compliant with ISO9283.
*4) Operating space is expanded when 25kg payload mode is selected.

Working range CRX/3-7A

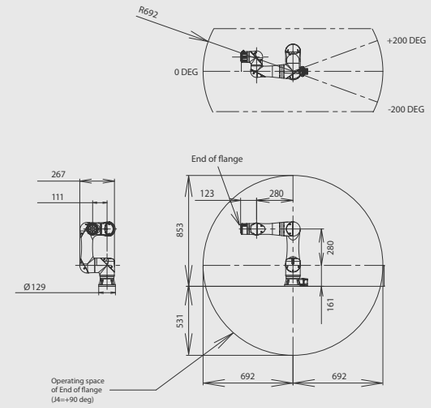

Working range CRX/5-10A

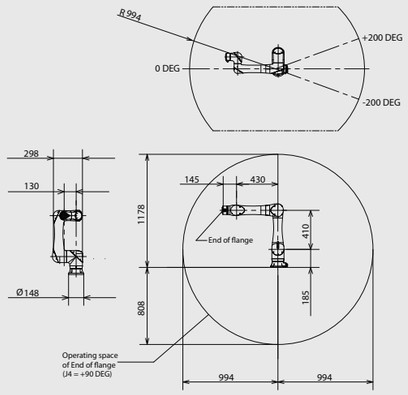

Working range CRX/10-12A

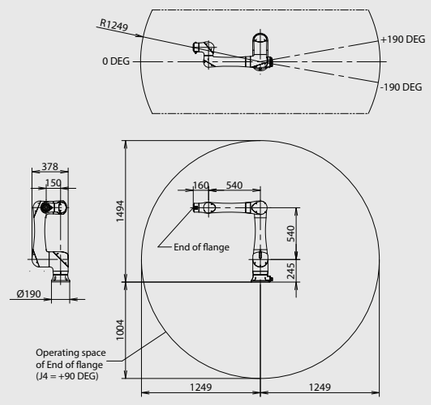

Working range CRX/10-14A

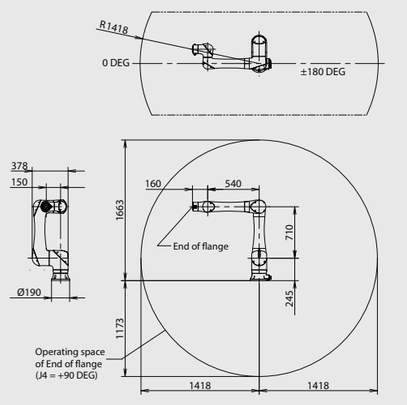

Working range CRX/20-14A

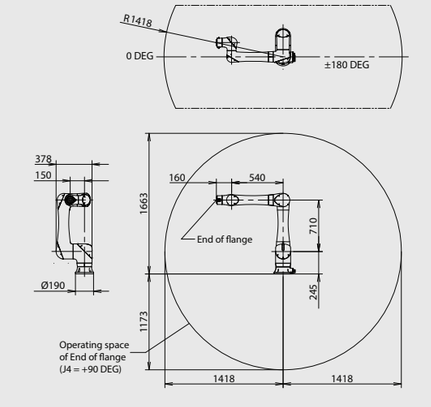

Working range CRX/30-18A

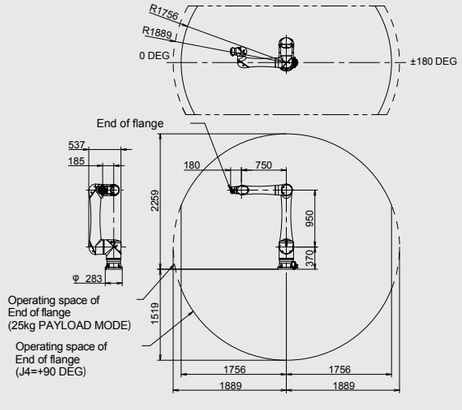

FANUC



The Most Extensive Collaborative Robot Lineup ...EVER

MORE choices
MORE payload
MORE reach
MORE control

888-FANUC-US | FANUCAMERICA.COM | © 2026 FANUC AMERICA CORPORATION | ALL RIGHTS RESERVED